Stirling M. Olberg W1SNN/WR1AJE
19 Loretta Road
Waltham MA

The Challenge Of 10.5 GHz

—*use it or lose it to Smokey*

The reader interest in this series of microwave-oriented projects has been tremendous. Stirling indicated in a letter to 73 that he has been flooded with requests for additional information relating to the original "Smokey Detector" article (73, Holiday, *1976). Please bear in mind that experimenting with UHF and microwave devices requires restraints not required at lower frequencies. There is considerable evidence that microwave radiation, even at very low levels, can have strange physical effects. Research in this area is continuing, so, for the present time, play it safe. Under NO circumstances look into the horn of an operating microwave transmitter. Heating of the inner eye may occur, causing sight impairment. Do not direct the beam at other persons. Allow common sense to prevail while experimenting with microwaves. The* New Yorker Magazine *published an article ("The Roving Reporter — Microwaves," Dec. 13 and 20, 1976) concerning the research into the possible effects of microwave radiation. Read it. — Ed.*

Photo A. The tuning screws and modulator diode are shown in a different position from that described in the text. These components may be located in either position, but the detector diode must be fed as shown to allow access to the tuning screws.

The smokey detector[1] was presented to drivers for, among other things, the safety value it presented. It was intended to provide a radar warning and therefore slow the driver down to a safe speed.

There are many possible options for modifications of this device for the smokey constructor who uses his imagination. I have received a lot of letters asking how to incorporate them.

One very fine idea came from Wayne W2NSD. He suggested that the smokey detector have an oscillator which would operate on X-band incorporated into the design. This addition, with suitable circuitry, would make it a transceiver. It will also do many more things that can provide some amusing effects. This single addition was the subject of many requests for a how-to-do-it circuit.

The addition will make the unit into a transceiver and Doppler radar. In fact, the addition of the oscillator will make it exactly like the rf head of surveillance radars used in traffic control.

Other letters indicated an interest in a variable-frequency modulator oscillator giving a range of 300 to 2000 Hz. I even had one request for the addition of the Trekkie circuit, so the Starfleet of the UFPCC could be contacted.

Let's get on with the circuit additions by examining the electronics first. You will see that the primary circuit, consisting of the smokey de-

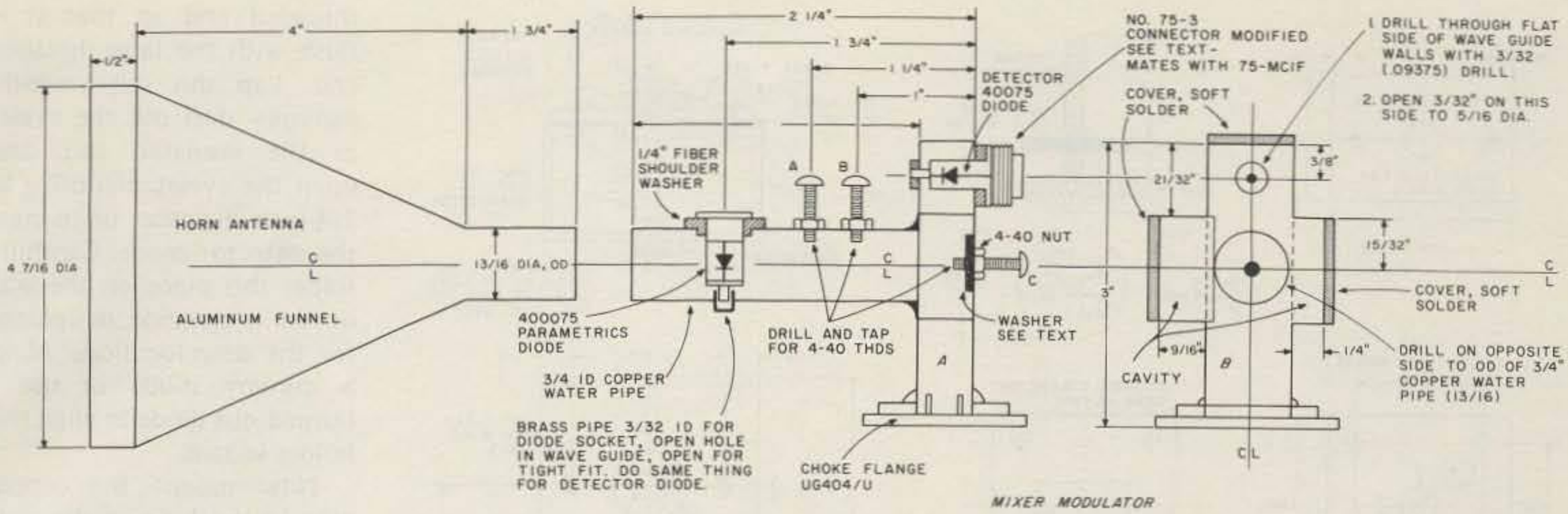

Fig. 1. The mixer modulator. Materials: 4-7/16" diameter funnel; ½" x 1" copper waveguide — RG-52/U.

tector preamplifier, is still incorporated. The amplifier is roughly the same circuit, except that it consists of integrated circuits, occupying a much smaller space.

Also, this unit is more easily adapted to serve as part of the transceiver modulator. The microphone incorporated is a standard CB mike which has a switch that is push-button operated to do the many functions required in a CB transceiver. This switch blends nicely into the transceiver, and, best of all, it's inexpensive.

Now examine the function switch, S3. You can see that it serves to shift the unit from duty as a transceiver to performance as a Doppler radar or smokey alarm. Note that, when in the alarm position, a variable oscillator at audio rates should meet the requirements of the variable-frequency modulator enthusiasts. Note also that the control switch for this circuit, a 3-position switch, allows it to modulate the diode with a "bee baw" frequency response, a wailing sound familiar to all of us, and, of course, most importantly, a variable-frequency oscillator at the audio rate of 300 to 3925 Hz.

This oscillator may be calibrated in its frequency range, but, for better reference, the dial can be directly marked in miles per hour by dividing the frequency output of the oscillator by the one mph Doppler frequency,[2] 31.4 Hz. The variable-frequency oscillator pot dial will then be calibrated from 9.5 to 125 mph.

In the Doppler radar function position, the Doppler sounds of vehicles moving toward or away from the antenna will be easily recognized as a beat that rises in frequency when a vehicle approaches and drops in frequency when the vehicle recedes.

Many other sounds, such as aircraft and large ships, can also be detected. A helicopter can be heard quite a while before it can be seen. This technique is used as an intruder alarm in many burglar warning systems.

In the Starfleet warning position, Trekkies[2] will, of course, be able to carry on their communications with one another simply by turning the switch to that position and pressing the mike button, which momentarily sends the ID signal.

In the transceive position, speech modulation is applied to the Gunn effect diode oscillator. The level of modulation is controlled by the audio amplifier volume control. The speaker is disabled so that no feedback will exist. Note also that an audio jack is incorporated so that the signals for any function can be directed into the car stereo or two meter audio system. When this option is used, the speaker switch, S4, must be turned off.

Note that a voltage regulator is shown for the Gunn oscillator. This is a three-terminal regulator and should not be left out in favor of some lesser regulator system. Failure of the diode will surely bring forth new expletives, since the diode costs approximately $25. A second protective circuit is made up of a low-voltage, high-current diode connected after the fuse. If primary voltage reversal occurs, this diode will blow the fuse before most of the semiconductors are ruined.

A tune-up aid, consisting

Photo B. Gunn effect oscillator assembly parts. Not shown is the cover iris to the waveguide flange.

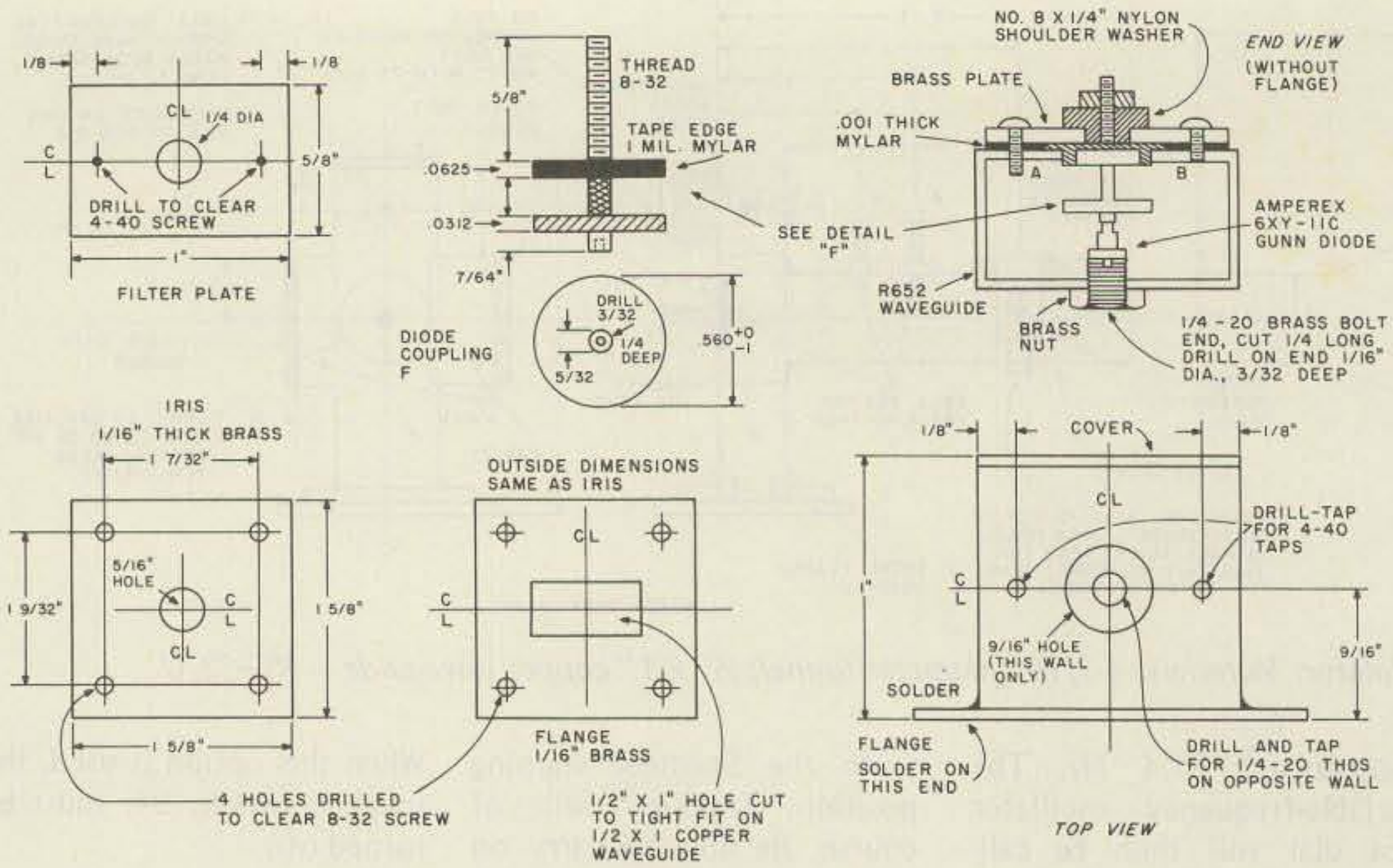

Fig. 2. Gunn diode oscillator for 10 GHz.

of a microwave diode connected across a meter, is used in the initial tune-up and can be temporarily constructed for this purpose. A VOM and a muffin fan are all that are needed to tune this rig up.

Construction of the electronics can be done on a small piece of perfboard. Since there are no real problems in the layout other than those common to audio circuits, I will discuss the microwave plumbing, which must be fabricated by the constructor. Hand tools are all that are needed, with one exception — the diode coupling unit, which must be turned on a lathe.

The horn for this unit is made from an aluminum funnel of the approximate dimensions shown in Fig. 1. The throat of the funnel must be broached out to take the taper out of it. Funnels of this size can be obtained from a farm supply dealer and are primarily used in dairies. I broached mine to shape with a 13/16-diameter rod stuffed down the funnel throat gently tapping the rod with a hammer. It's easier than you think, but care must be used or the metal will tear. When the broaching is completed, the throat of the funnel will slide over the outside diameter of the 3/4" i.d. copper water pipe section used as the diode modulator and circular waveguide to rectangular guide adapter shown in Fig. 1(a), the mixer modulator.

To construct the mixer modulator plumbing, start by cutting off a section of RG-52 waveguide so that each end is square and deburred. Lay out the holes as shown in Fig. 1(b). Drill the two sets of holes by first running a number 43 drill in each location shown, through both walls. These holes will serve as pilot holes for further drilling of larger holes and, therefore, should be drilled carefully so that the holes are directly in line with each other.

Open the holes, as shown in Fig. 1(b). Deburr each hole, and then open and tap for threads, as shown in Fig. 1(a). Solder in place small sections of 3/32" i.d. pipe to serve as sockets for the ends of the Parametrics 400075 Schottky diodes. This pipe is obtainable at model shops. Do the same thing for the detector diode. Locate a 3/8"-diameter, 1/16"-thick brass washer that will pass a 6-32 screw on the wall of the waveguide facing the copper pipe, as shown in Fig. 1(a). Solder the washer in place so that it is concentric with the screw. Complete drilling all holes as shown in Fig. 1(a) on the copper pipe. Complete tapping all holes on the pipe. Lay this piece aside for the moment.

Measure off the two openings shown for the waveguide cavities on the ½-inch wall of the waveguide section you just drilled. Carefully and squarely saw through the walls so that the saw cuts just break through the sidewall metal. Then file the edges between these cuts until the flats fall away. Level these cuts off so that the thickness of the sidewall is exposed. Next, cut two small pieces of waveguide, as shown, for the sidewall cavities. Cut these square, and deburr them. Clean all surfaces with "Brite Dip" or soldering acid. Now assemble the sidewall cavities, as shown, and hold them in place with a C-clamp. Be sure to place the ½ x 1-inch covers under the C-clamp, and soft-solder all parts in place. Next, place a flange (choke-type UG-404/U) on the waveguide end shown in Fig. 1(a). Be sure it is square with the vertical wall. Then solder it in place. Put a ½ x 1-inch cover plate on the opposite end, and solder it into place.

Modify an Amphenol #75-3 microphone connector by sawing off the small-threaded end so that it is flush with the large-threaded end. Lap this cut smooth, carefully drill out the eyelet in the insulated end, and open the eyelet mounting to 1/4-inch diameter or to clear the detector diode. Carefully solder this piece on the wall of the waveguide designated for the detector diode. Make a dummy diode or use a burned out diode to align this holder square.

Now mount the copper pipe in the hole on the wide wall of the guide as shown in Fig. 1(a). Place the screws and jam nuts as shown in the drawings. Clean all solder flux from the assembly with hot water, wash them with alcohol, and dry them thoroughly.

Check all of the assembly to see that all parts are securely soldered and square with the waveguide walls. Slide the horn throat over the outside of the copper pipe now mounted on the waveguide assembly. It should look something like Photo A. Not shown is a hose clamp which holds the horn in place securely.

If you wish to build your own Gunn diode oscillator, the details are shown for this construction. It is as simple as most of the previously described plumbing. A Gunn diode, Amperex-type CXY-11-C, obtainable from North American Phillips, which costs in the vicinity of $25, is used in this assembly and is relatively low in power, but is sufficient for the job. The assembled Gunn oscillator is also shown mounted on the plumbing. Photo B shows the components required. With the assembly construction drawing and the photo, you should have no trouble constructing this.

If you wish to buy the Gunn oscillator assembly, it is available from Microwave Associates or General Electric. The units used for this purpose are usually available for police or intruder alarms and vary in price depending upon power output. If a commer-

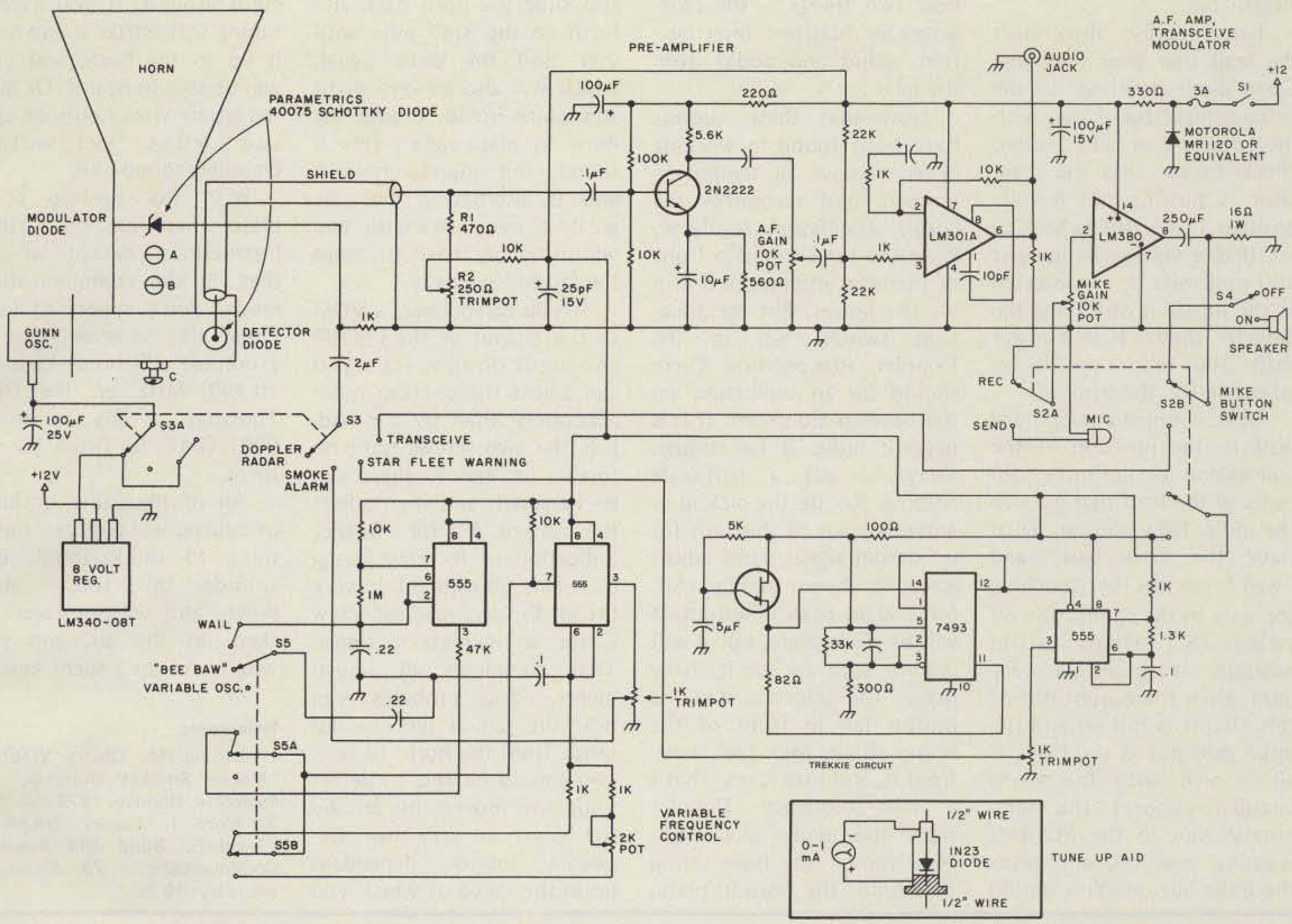

Fig. 3.

cial unit is chosen, the three-terminal regulator indicated may have to be changed to one which delivers a higher voltage. Usually a spec sheet accompanies the oscillator.

As a last resort, if a Gunn oscillator is beyond your means, a Klystron oscillator can be used. Suitable information on these tubes, as well as power supply information, is available in amateur handbooks.

The construction of a Gunn oscillator is accomplished as follows:

There are two views given for a Gunn oscillator that should occupy your attention. (See Fig. 2.) These show the top view, with a flange in place, and the end view, with the flange absent. The flange was purposely left off so that the assembly of components and mounting screws would be in view. The two screws marked A and B in this view serve an obvious double purpose. The B screw is a 4-40 x ¼-inch-long brass screw and should be set in place so that it is not protruding into the waveguide. If it does, file it until it just fills the hole and is flush with the inside of the guide. The A screw is 3/8-inch long and of the same material. It sets the frequency of the oscillator. Making it longer will lower the frequency, and, conversely, shortening it will raise it.

The insulating material for the diode coupling unit should be mylar, but other material can be substituted.

When installing the diode, mount it in the hole of the short 1-20 brass plug with the large flange of the diode on the plug. Screw the plug into place so that the other end of the diode engages the diode coupling firmly, but do not compress this $25-dollar jewel, or the diode will be destroyed by cracking. Just a firm clamp will do.

As shown in the top view, all holes should be drilled and tapped and the cover and flange attached with soft solder. For drilling and soldering, use the same techniques as described in the plumbing assembly.

The diode coupling should be turned on a lathe and should adhere to the dimensions as shown. If you are ambitious enough, you could make this unit with a screw and washers. The edge of the top section of this unit must be insulated with mylar tape. A 1-mil thickness is required. It can be obtained from a drafting supply house or perhaps from a friendly draftsman. Use another piece of the same tape over the top of the guide to insulate the top of the diode coupling from the filter plate which is gounded to the waveguide. This plate provides the other half of an rf capacitor in conjunction with the top of the diode coupling.

When all of the parts are assembled, including the diode, place the iris over the flange. Be sure the holes all align. They are drilled to fit the choke flange on the plumbing assembly and are not uniformly spaced, so there will be no possibility of crossguiding the two units.

Crossguiding will absolutely put you out of business and may even blow your diode. The microwave industry thought of this years ago, so that's why the commercial chokes and flanges are drilled this way — not because I thought of it.

So now let's get on with the tune-up procedure. I said in the beginning that all you were going to need was the tuning meter and diode shown in the drawings and an

electric fan.

Temporarily disconnect the lead that goes from the Gunn diode oscillator to the voltage regulator. Now, with the power on (12 volts), check to see that the regulator is putting out 8 volts positive. If it is, then check to see that a voltage of at least 100 millivolts dc is indicated at the junction of R1 and the detector diode. If it is lower than 100 mV, raise it by adjusting R2, the trimpot.

Next, connect a temporary lead to the junction of the connection to the mike gain pot and the lead that goes to the mike. Now you can signal trace the "bee baw" and "wail" circuits by touching the wire to the connection on switch S3, smoke alarm position. It should be very loud when the output pot of this circuit is full on and the mike gain pot is up. Now, if all is well with the alarm circuits, connect the temporary wire to the Starfleet warning position, and press the mike button. You should hear two things — the characteristic Starfleet interrogation sound and audio from the mike.

Now that these circuits have been found in working order, remove all temporary jumpers and reconnect the Gunn oscillator regulator. Place the tune-up aid in front of the horn antenna, and turn on the power. Put the function switch, S3, in the Doppler radar position. There should be an indication on the tune-up aid meter. If it is pegged, move it far enough away to get a half-scale reading. Rotate the pickup or antenna leads of this unit for maximum signal. Now adjust screw C, shown in Fig. 1(a), for a slight peak in output. It will be discernible, but it will require care to see it. Now place the electric fan or muffin fan in front of the horn, about four feet away from it, and turn it on. That's a low-frequency Doppler from the blades you hear. Now loosen the hose clamp that holds the horn in place, and slide the horn back and forth on the 3/4" pipe until you find the peak signal, which will also be very slight and quite broad. Clamp the horn in place when this is found, and adjust screws A and B alternately. For the greatest signal strength, you will probably have to move the fan further away.

If you can connect a VOM to the output of the LM380 and put it on an ac scale, you can adjust these screws more accurately than by ear. Adjust the two screws until no further increase in signal can be detected, and then adjust the trimpot, R2, for a further indication of increase in signal. This adjustment is very broad. Finally, readjust screw C for an increase in signal. That completes all adjustments. You probably can hear the fan at quite a distance from the horn. In fact, you should be able to detect your own movements around the horn as very low frequency sounds, dependent upon the speed at which you move around. If you have a tuning fork, strike it and hold it up to the horn, and you will be able to hear it. Or take the whole works outside, and see what automotive Dopplers sound like.

With the tune-up complete, there are no further instructions, except to say that, in the communication mode, don't expect to hear signals like on seventy-five in a contest. I'll hold skeds on 10.499 MHz on the fifth Thursday of any month at 0001 GMT. So listen for me there.

All of the other options, of course, will give you something to think about. But consider this, too — slow down, and we can keep our sked on the air, and you won't end up a silent key. ■

References

1. Stirling M. Olberg W1SNN, "Mobile Smokey Detector," *73 Magazine*, Holiday, 1976.
2. Marc I. Leavey WA3AJR, "Trekkies, Build this Starfleet Communicator," *73 Magazine*, February, 1976.