Cellular Phone Detector

Detects 800 MHz band cellular phones with a 83 MHz IF
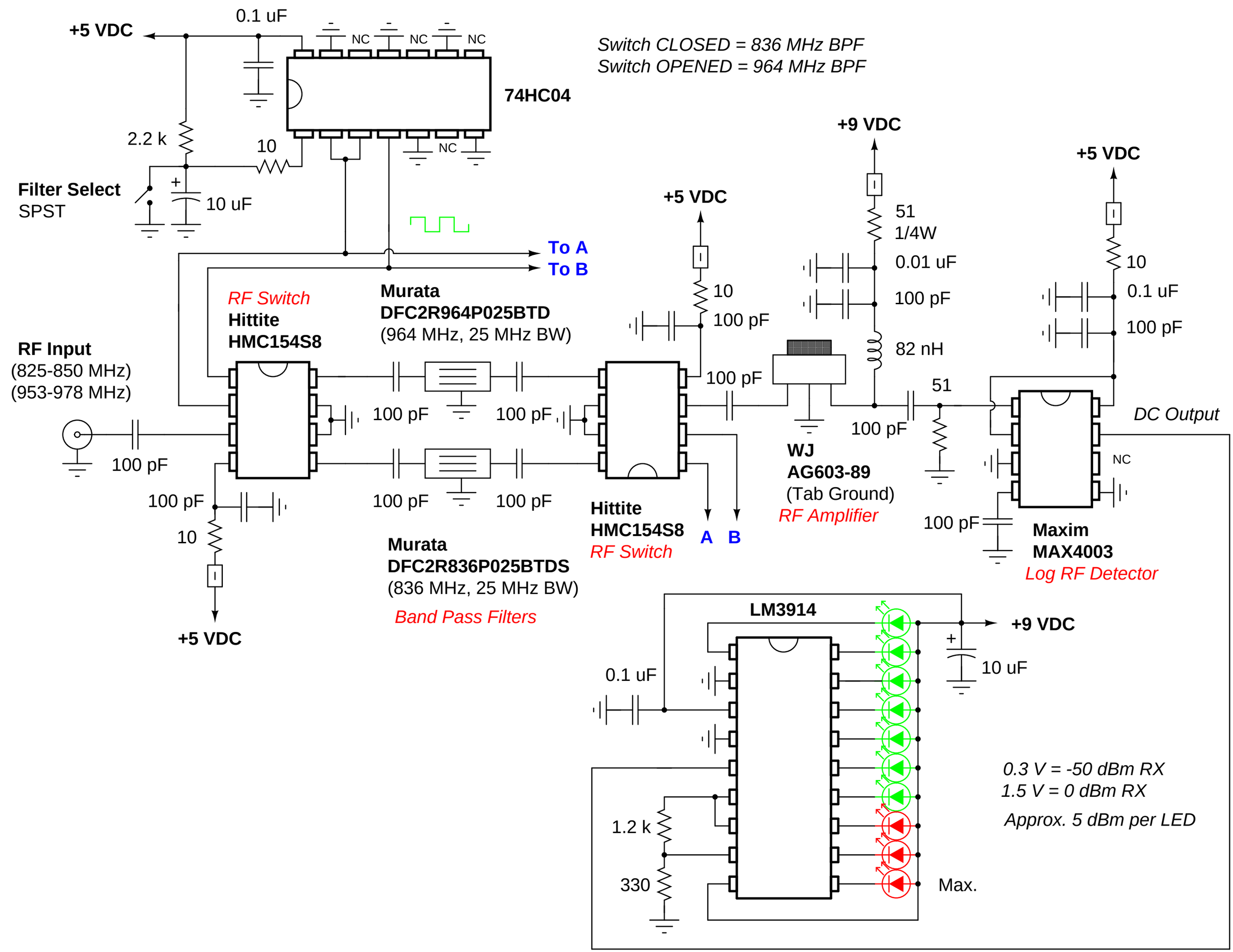
www.gbppr.org