High Power Cellular Phone Jammer

www.gbppr.org
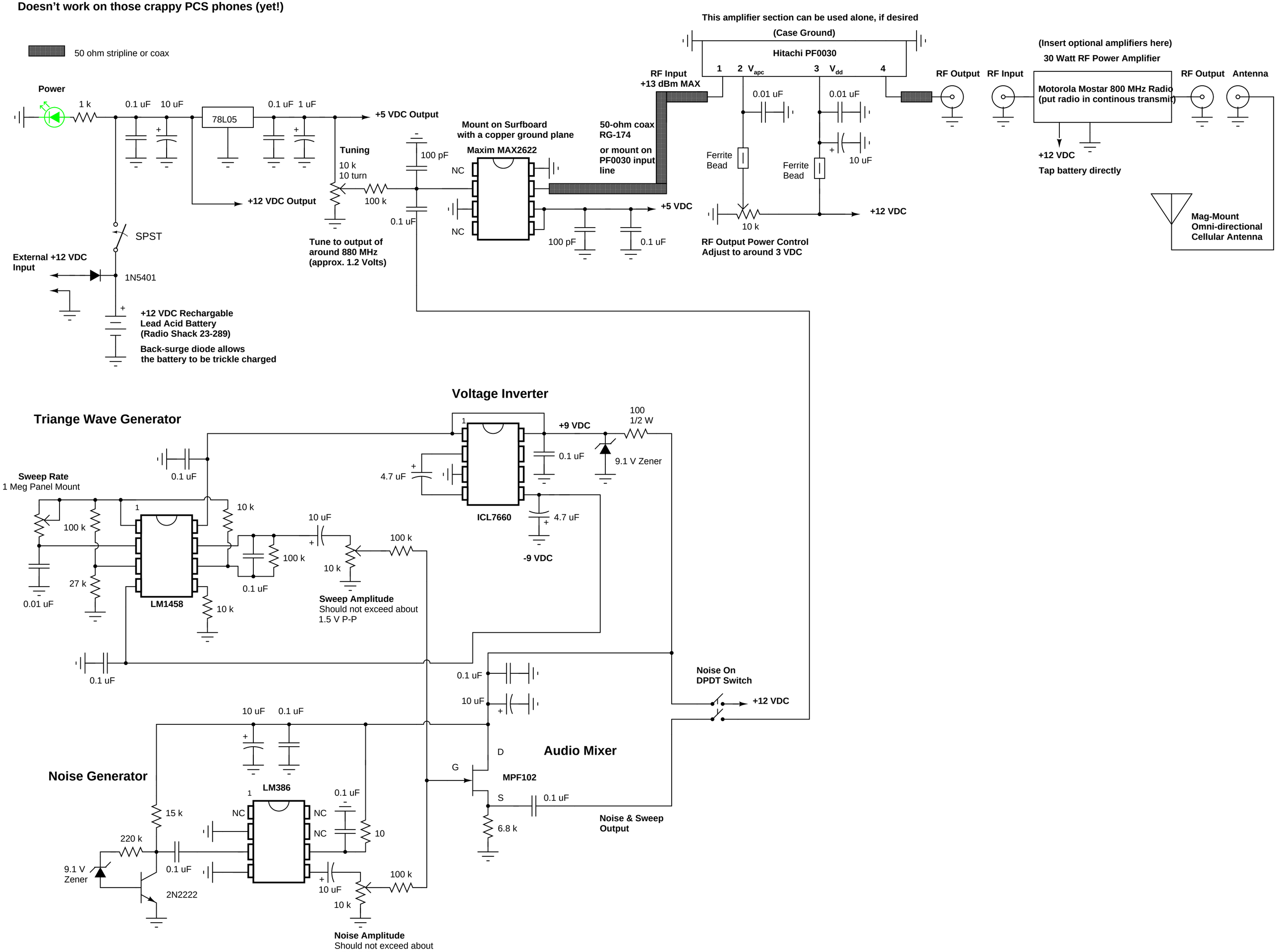
Generates a carrier with noise that sweeps across the analog cellular phone band
Jamming distance depends on RF output power and antenna
Doesn't work on those crappy PCS phones (yet!)