Laser warning system to detect the number of receiver front-end design

0 Introduction

Laser technology after decades of development, and laser weapons from theory to practice. Large number of laser weapons has brought increasingly serious threat, laser warning equipment to the incoming laser is a laser detection and prediction of the basic means of confrontation. From the complex to determine the environment to detect incoming signal laser warning **system** is the most important task facing. With the **development** of **digital** technology, the continuous improvement of processing speed, the use of digital technology such as FPGA, such as to deal with possible warning signal.

Based on the number of laser warning system designed to detect the front-end receiver, the primary objective of detecting a certain band of the incoming laser signal, with high sensitivity, can detect the smallest laser energy to reach 1μW, the dynamic range of up to 100 dB. The design of high-sensitivity detection of the laser diode, the incoming laser pulse signal current pulses in the smallest system equivalent for more than 400 MHz bandwidth, a large bandwidth, low-noise operational amplifier transconductance zoom in zoom mode and current and voltage conversion, then after plastic surgery to enlarge the number of circuits to identify the pulse signal, which under the incoming laser pulse width to determine information such as signal strength. Narrow pulse as a result of the capacitance of the system sensitive to the way the use of ADS simulation to determine the size of capacitors at all levels, simulation and test results indicate that front-end receiver with a high detection sensitivity, large dynamic range, post-processing to the digital system to provide accurate incoming signal characteristics. System with the broadband operation transconductance amplifier to replace the traditional transistor dedicated to enlarge the way narrow pulse weak, with wide bandwidth (500 MHz), low cost, in order to enlarge the weak level ns pulse current signal provided by broadband a good program, at the same time the system of simple structure, strong ability to adapt to the environment, easy to maintain.

1 to detect the front-end receiver design and simulation program

Back-end digital system in accordance with the requirements of the needs of the incoming signal through the photoelectric detection of laser diodes can be converted into digital **systems** to deal with the digital pulse. As the photodiode signal in the laser produced a narrow-pulse current, photodiode selected for the minimum output current of 10 nA pulse current, pulse width of 10 ns, calculated in accordance with the effective frequency band of the amplifier must be greater than 400 MHz, to meet the required 500. MHz bandwidth of the operational amplifier as the amplification, and the completion of current and voltage conversion, the voltage pulse. As the incoming signal is low or too large, the pulse signals are not required voltage digital signal, the need for the plastic and enlarge the number of systems to achieve the standards of conventional voltage (high voltage of 5 ~ 3.3 V, for low-voltage 2.1 ~ 0 V), the system has been used to receive the signal after amplification to the amplifier saturation level approach to achieve the digital voltage shaping. General scheme as shown in Figure 1, after the waveform amplifier requirements for each class after the figure of the icon; Finally, the current into a photocell to detect the form of pulse voltage, pulse width representative of the size of the role of laser energy.

Because the minimum signal bandwidth is wide, weak pulse current of the circuit capacitance sensitive components, in order to be specific parameter values, the ADS (Ad-vatreed Design System) **software** used in transient simulation method for system simulation, Figure 2 for the simulation circuit topology. System testing in accordance with the minimum requirements and principles of the characteristics of cell in the ADS software using pulsed current source, resistor and capacitor in parallel model of the cell instead of the actual role of the laser pulse under the current model, as shown in Figure 3 circuit parameter setting is the smallest of the incoming laser energy 1μW phototube output current of 10nA, a width of 10 ns of the current pulse, the corresponding port current simulation waveforms shown in Figure 4. System using low-noise amplifier high gain-bandwidth product (500 MHz) to achieve amplification of the operational amplifier, simulation of the incoming laser energy under different light output waveform of the system, the role of different incoming laser used in the simulation of the probe laser photoelectric tube model of the size of current pulse, current pulse width to indicate the changes. The results in Figure 5 as shown in Figure 7. The results can be seen from the way would be to enlarge the number of pulses, the output pulse width is proportional to the incoming laser power. System can not only determine whether the incoming laser, can also be calculated from the size of the passage of laser energy.

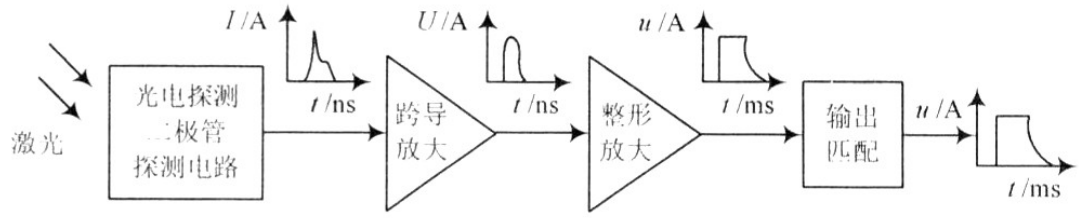

图 1 激光探测接收前端框图

Picture not clear? Click here to view the image (larger).

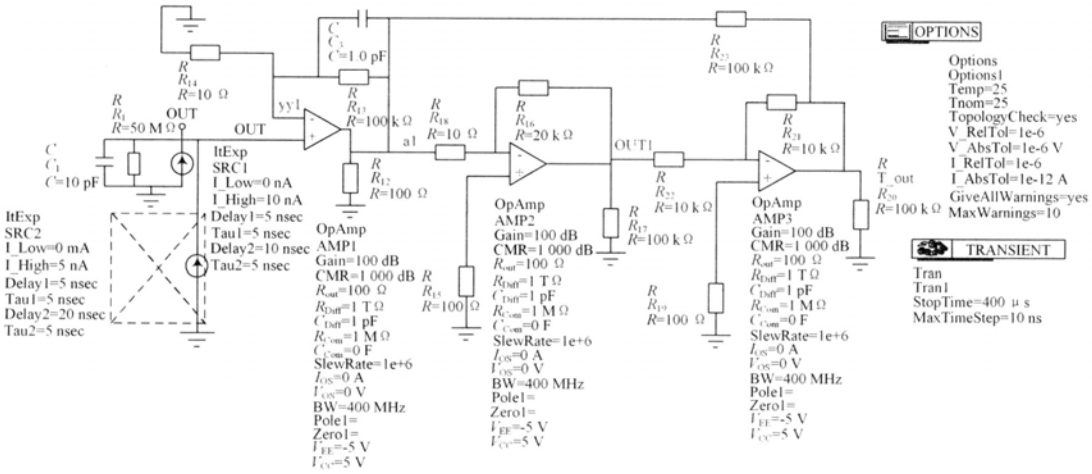

图 2 ADS 下仿真结构图

Picture not clear? Click here to view the image (larger).

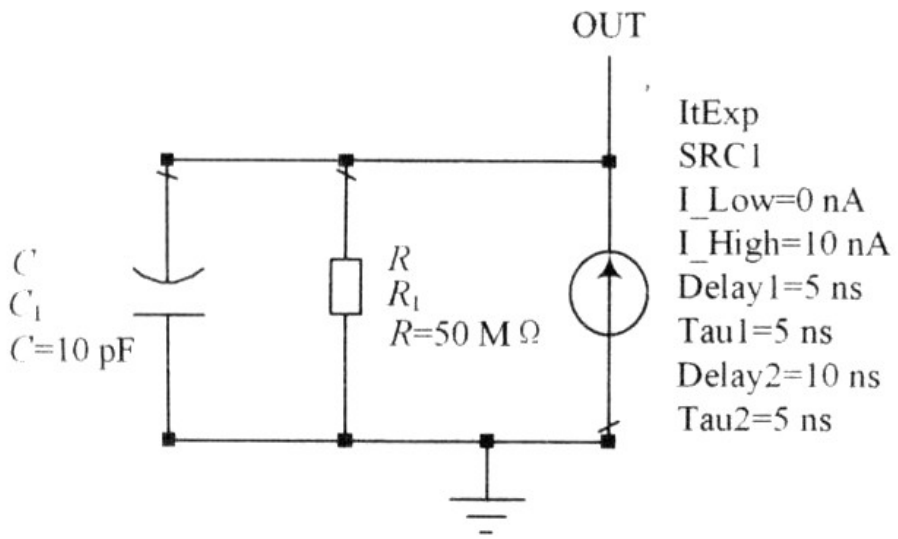

图 3 激光探测光电管在 ADS 中模型

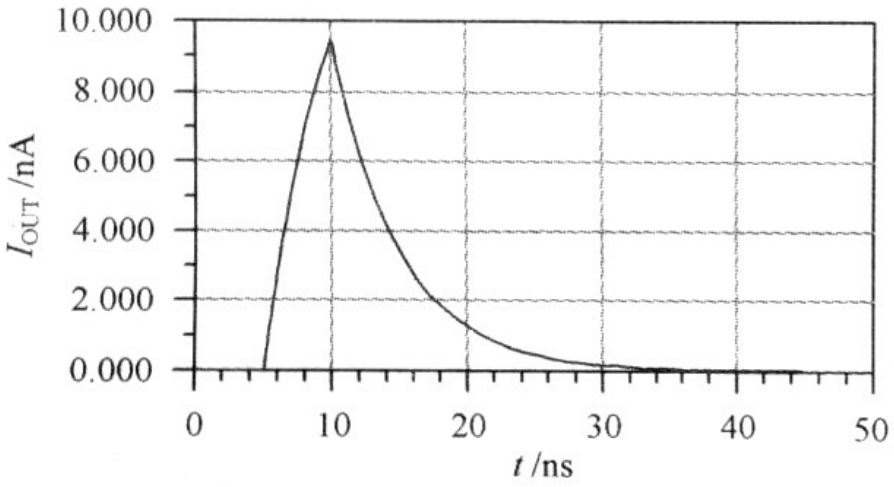

图 4 光电管探测到最小来袭激光的输出电流

Picture not clear? Click here to view the image (larger).

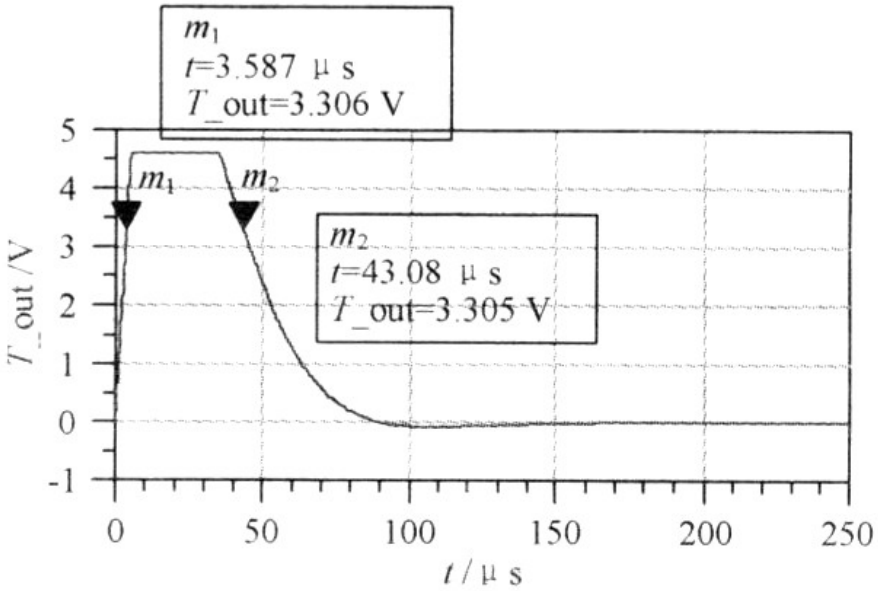

图 5 在最小激光能量作用下的系统输出结果

Picture not clear? Click here to view the image (larger).

2 front-end receiver circuit

According to the simulation results, the first choice of the CLP Group's 44 production GD3561 photodetector diodes for laser detection, the minimum detectable energy 1μw, the minimum response time of 2.5 ns. Form the first level transconductance amplification using methods and devices used to enlarge the middle-class BB Division of broadband, low-noise amplifier chips OPA656, gain-bandwidth product to reach 500 MHz, 8 ns of the voltage set-up time, input noise 18 nV / Hz; shaping circuit AD8611, with an extremely short period of 4 ns delay time, the system specific circuit see Figure 8.

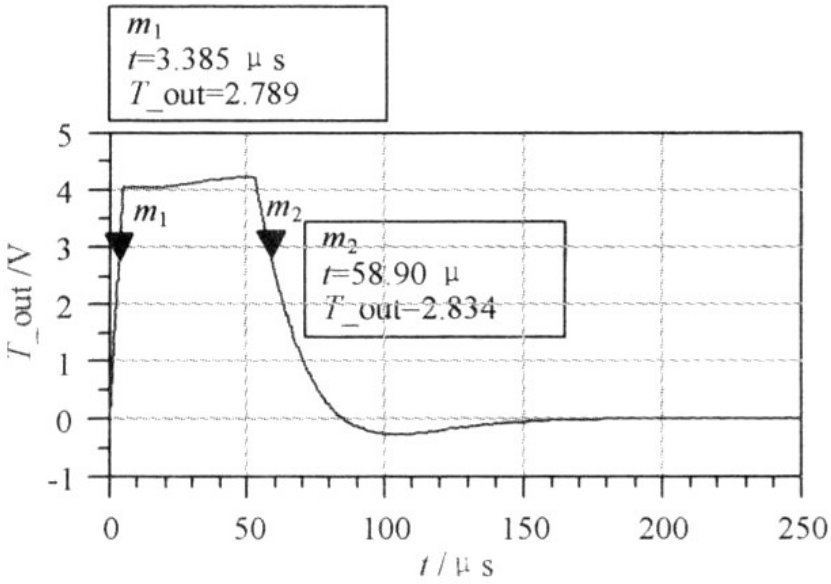

图 6 在 1 mW 激光能量作用下的系统输出结果

Picture not clear? Click here to view the image (larger).

Test 10 000 w of the laser light source, a wavelength of 1.3μm, through the optical attenuator, attenuation of 100 dB can be achieved system requires a minimum **power** 1μw, high-speed output TDS460 oscilloscope to capture the output of the pulse signal, the results of Figure 9 Figure 12.

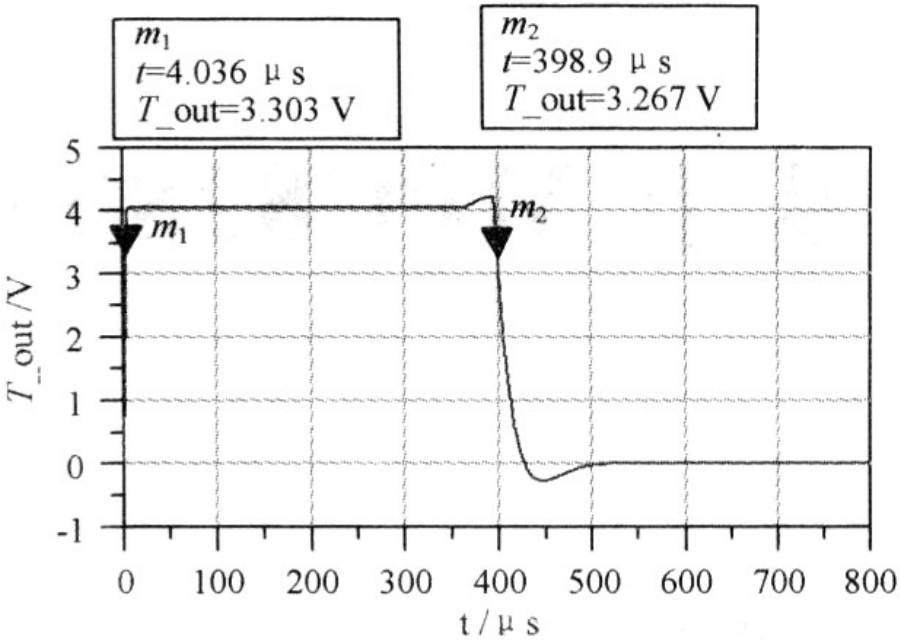

图 7 在 1 W 激光能量作用下的系统输出结果

Picture not clear? Click here to view the image (larger).

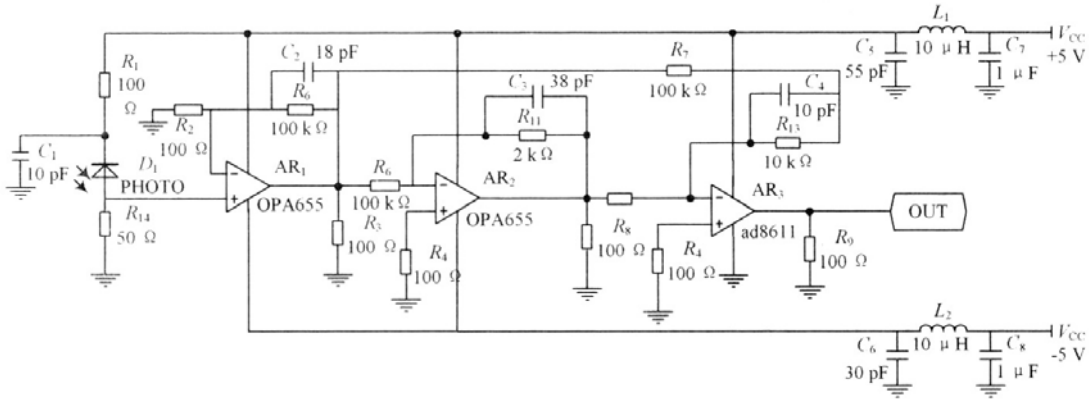

图 8 探测接收前端原理图

Picture not clear? Click here to view the image (larger).

Figure 9 in 1 μw the role of the laser energy, the cell at both ends of the transient voltage pulse, it can be seen under power in the smallest, resulting in the voltage and current pulse time is short, the peak small; Figure 10 that after pulse amplification system after the digital pulse waveform has to meet to address the requirements of digital circuits. Figure 11 The role of 1 mW for the results, Figure 12 for the role of energy 1 w results. Amplification can be seen through the system after the digital circuit to identify the rectangular pulse signal, the signal strength with the arrival of the output pulse is proportional to. System to achieve a dynamic range of 100 dB.

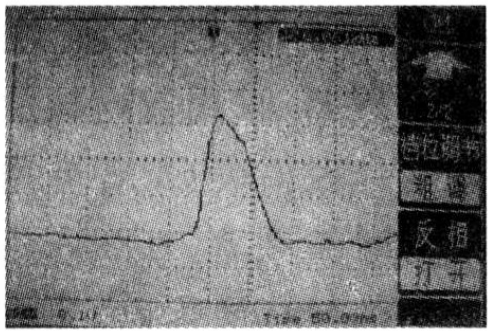

图 9　在 1 μW 的激光能量作用下光电管端电压

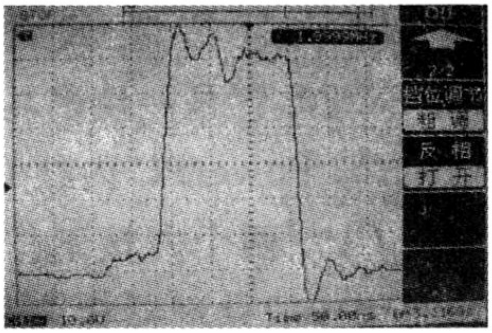

图 10　1 μW 激光能量作用系统产生的数字脉冲信号

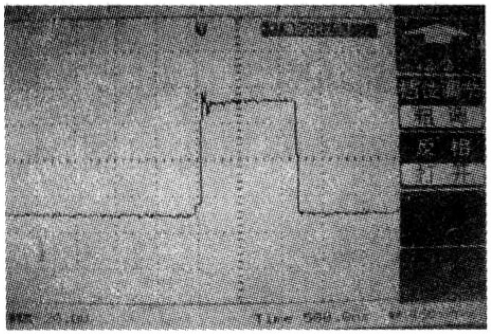

图 11　1mW 激光能量作用系统产生的脉冲信号

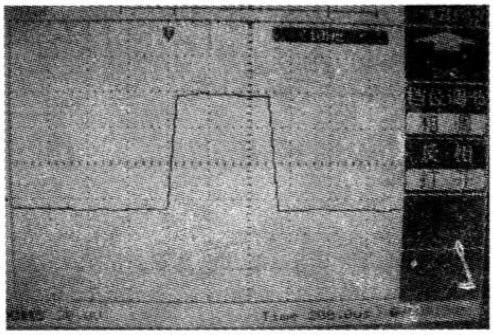

图 12　1 W 激光能量作用系统产生的脉冲信号

Picture not clear? Click here to view the image (larger).

3 Conclusion

Test results show that the detection front-end receiver with the minimum detectable signal 1μw of the incoming laser, the dynamic range of up to 100 dB, generated by pulse treatment level to meet the digital circuit. Follow-up to the digital circuit such as the FPGA circuit to provide an accurate signal detection. System uses a broadband amplifier transconductance mode operation to enlarge the narrow pulse weak signal, the use of simulation software in ADs approach to a narrow pulse on the capacitance-sensitive key issues, to provide narrow-pulse current weak signal amplification to provide a very good program. Amplification system with 500 MHz bandwidth, you can enlarge the narrow pulse width can be narrower than the ns level, while prices are cheap, cost-effective. The actual test, a low false alarm rate, detection speed, detection receiver front-end low noise. System design structure is simple and easy to maintain, not only can be used to detect incoming laser, the laser can also be used for security systems.