LED RF Signal Meter

August 2000 QST Version
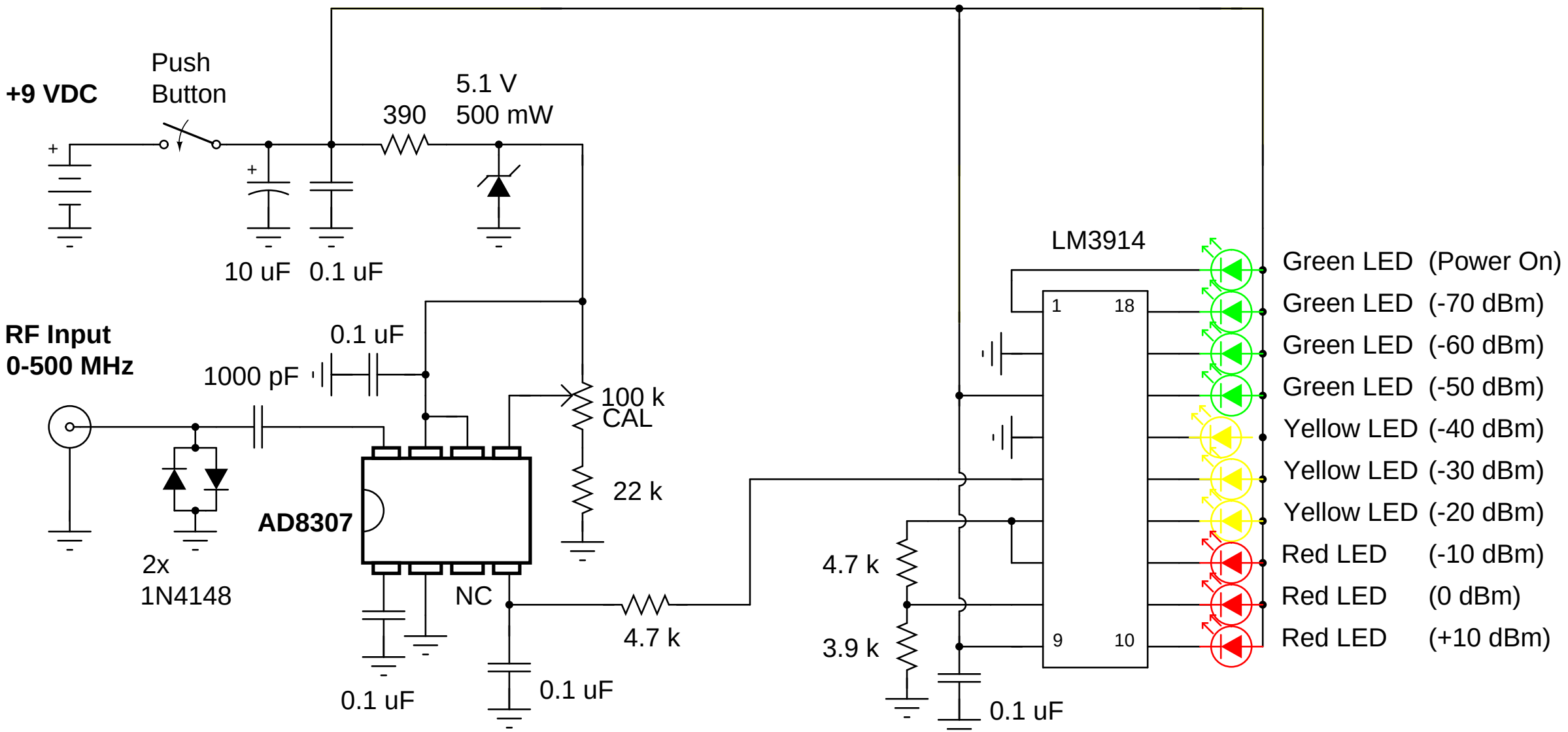
www.gbppr.org