CA3035, CA3035V1

10-Lead TO-5

H-1384

Ultra-High-Gain Wide-Band Amplifier Array

Features:

- *Three separate amplifiers - gain and bandwidth for each amplifier can be adjusted with suitable external circuitry*
- *Amplifiers operable independently or in cascade*
- *Exceptionally high cascade voltage gain - 129 dB typ. at 40 kHz*
- *Low noise performance*
- *Wide-band response*
- *All amplifiers single-ended - only one power supply required*
- *Wide operating temperature range - -55° C to +125° C*
- *Built-in temperature compensation*
- *Hermetically sealed, all-welded 10-lead TO-5 style metal package with straight or formed leads*

Applications:

- *Three individual general-purpose amplifiers*
- *Ideal for service in remote-control amplifiers - e.g., TV receivers*
- *Available in two electrically identical versions: CA3035 with straight leads; CA3035V1 with formed leads*

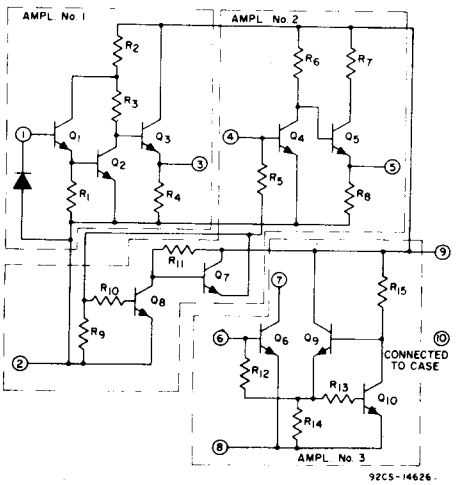

Fig. 1 — Schematic Diagram for CA3035 and CA3035V1

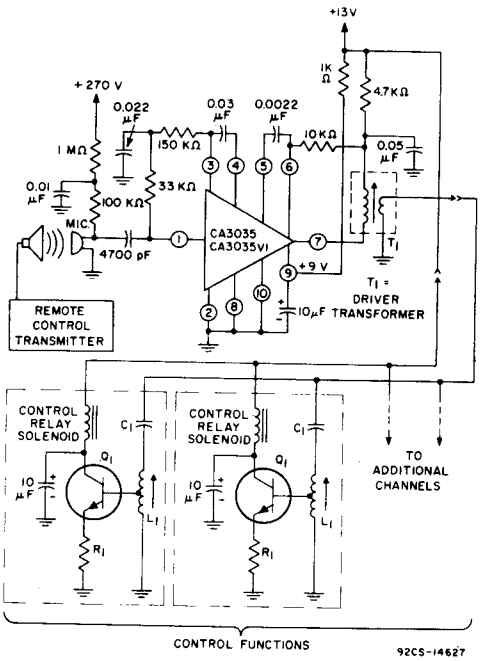

Fig. 2 — Typical Remote Control System

ABSOLUTE-MAXIMUM RATINGS:

Operating Temperature Range . . . . . -55°C to +125°C
Storage Temperature Range . . . . . -65°C to +200°C
Device Dissipation . . . . . 300 mW
Input Voltage . . . . . 1 V p-p
Supply Voltage . . . . . +15 V

ELECTRICAL CHARACTERISTICS AT T_A = 25°C

CHARACTERISTICS	SYMBOLS	SPECIAL TEST CONDITIONS	TEST CIRCUITS AND CHARACTERISTICS CURVES	LIMITS CA3035, CA3035V1 Min.	Typ.	Max.	UNITS
STATIC CHARACTERISTICS							
Quiescent Operating Voltage	V3 V5 V7	V_{CC} = +9V	Fig.3	– – –	2 1.9 4.9	– – –	V V V
Total Current Drain	I_d	V_{CC} = +9V, R_{L3} = 5KΩ	Fig.3	3.5	5	7.5	mA
DYNAMIC CHARACTERISTICS							
Voltage Gain: Amplifier No.1 Amplifier No.2 Amplifier No.3	 A_1 A_2 A_3	f = 40 kHz, V_{CC} = +9V		 40 40 38	 44 46 42	 – – –	 dB dB dB
Output Voltage Swing	V_{out} V_{1out} V_{2out} V_{3out}	R_{L1} = 10KΩ R_{L2} = 10KΩ R_{L3} = 5KΩ Sinusoidal Output, V_{CC} = +9V		 – – –	 2 2.6 8	 – – –	 Vp-p Vp-p Vp-p
Input Resistance: Amplifier No.1 Amplifier No.2 Amplifier No.3	 R_1in R_2in R_3in	f = 40 kHz		 – – –	 50K 2K 670	 – – –	 Ω Ω Ω
Output Resistance	R_1out R_2out R_3out	f = 40 kHz		– – –	270 170 100K	– – –	Ω Ω Ω
Bandwidth at -3dB point: Amplifier No.1 Amplifier No.2 Amplifier No.3	 BW_1 BW_2 BW_3	V_{CC} = +9V	 Fig.5 Fig.6 Fig.7	 – – –	 500 2.5 2.5	 – – –	 kHz MHz MHz
Noise Figure Amplifier No.1	NF_1	f = 1 kHz, R_S = 1 KΩ	Fig.4	–	6	7	dB
Sensitivity		V_{CC} = +13 V Relay (K_1) Current = 7.5 mA	Fig.2	–	100	150	μV

STATIC CHARACTERISTICS

TEST CIRCUIT

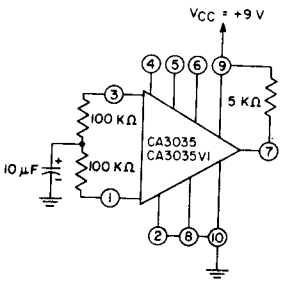

Fig.3

NOISE FIGURE TEST CIRCUIT

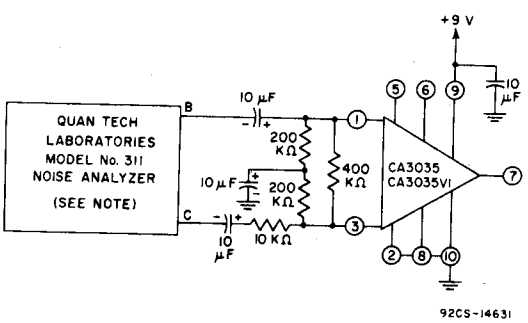

NOTE: SET ALL INTERNAL POWER SUPPLIES ON QUAN TECH NOISE ANALYZER TO ZERO VOLTS.

Fig.4

TYPICAL 1st-AMPLIFIER RESPONSE

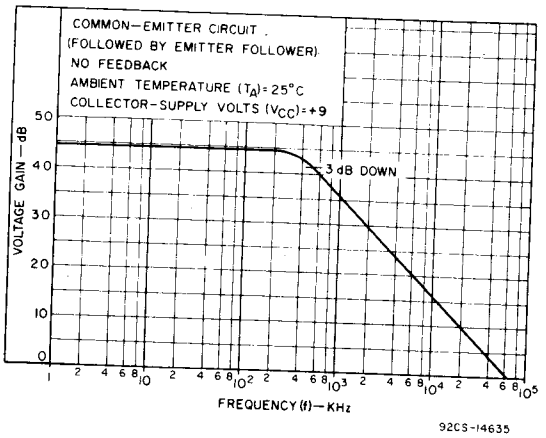

Fig.5

TYPICAL 2nd-AMPLIFIER RESPONSE

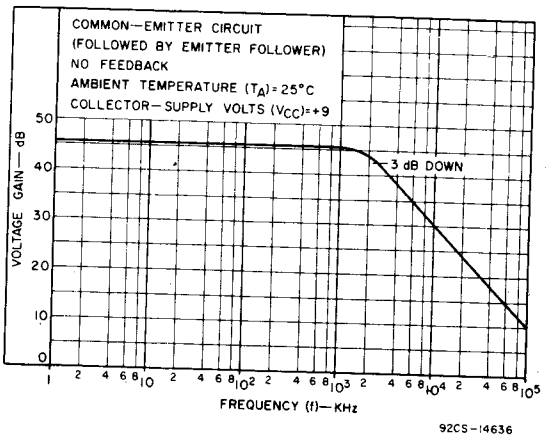

Fig.6

TYPICAL 3rd-AMPLIFIER RESPONSE

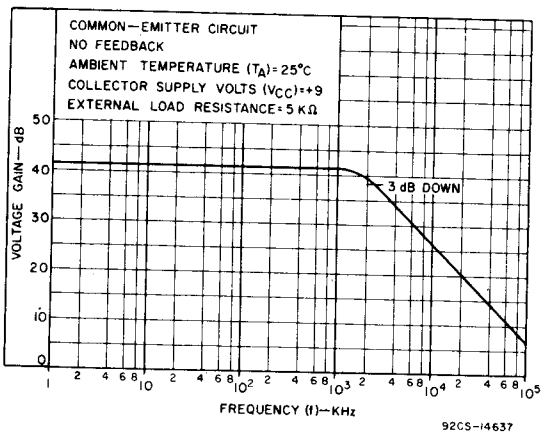

Fig.7