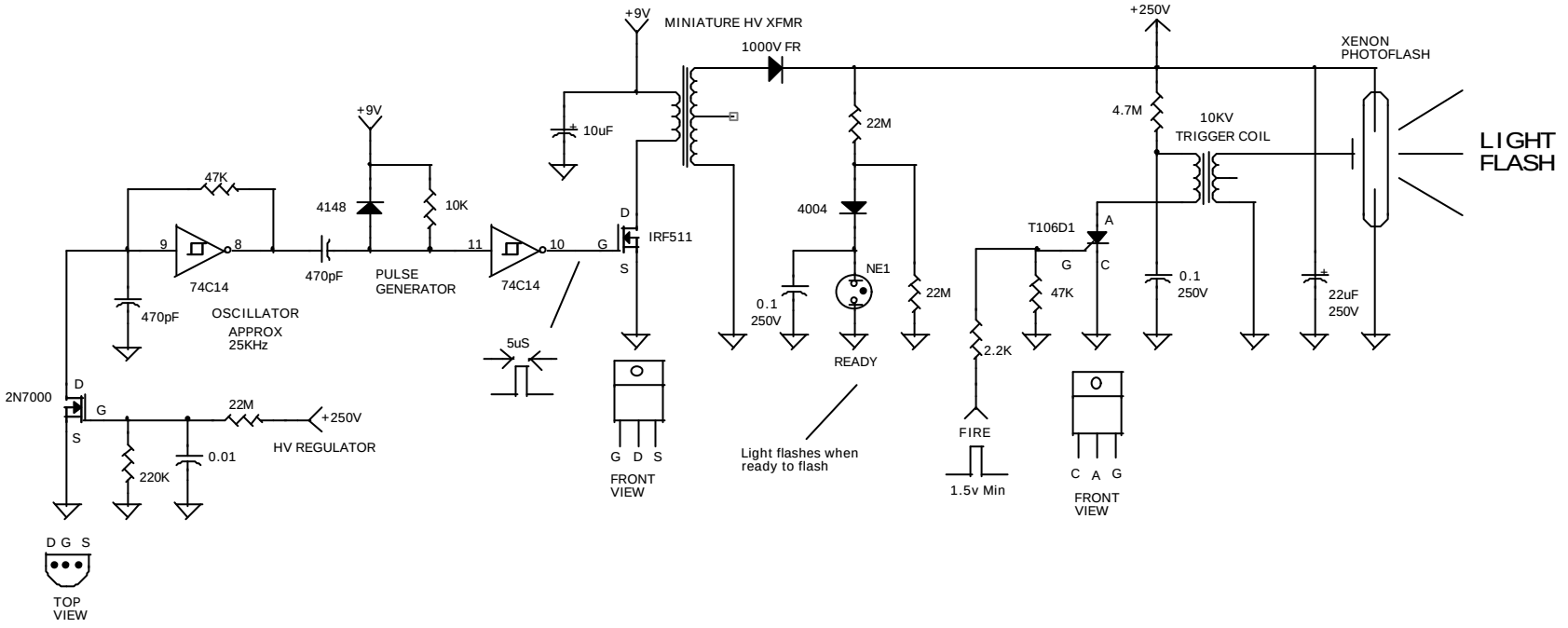
+9V
MINIATURE HV XFMR
1000V FR
+250V
XENON
PHOTOFLASH
LIGHT
FLASH
10uF
22M
4.7M
10KV
TRIGGER COIL
47K
4148
10K
4004
T106D1
A
G
C
9
8
11
10
G
D
S
IRF511
74C14
74C14
470pF
PULSE
GENERATOR
NE1
0.1
250V
22M
47K
0.1
250V
22uF
250V
470pF
OSCILLATOR
APPROX
25KHz
5uS
READY
2.2K
2N7000
D
G
S
22M
+250V
HV REGULATOR
0.01
220K
G D S
FRONT
VIEW
Light flashes when
ready to flash
FIRE
1.5v Min
C A G
FRONT
VIEW
D G S
TOP
VIEW