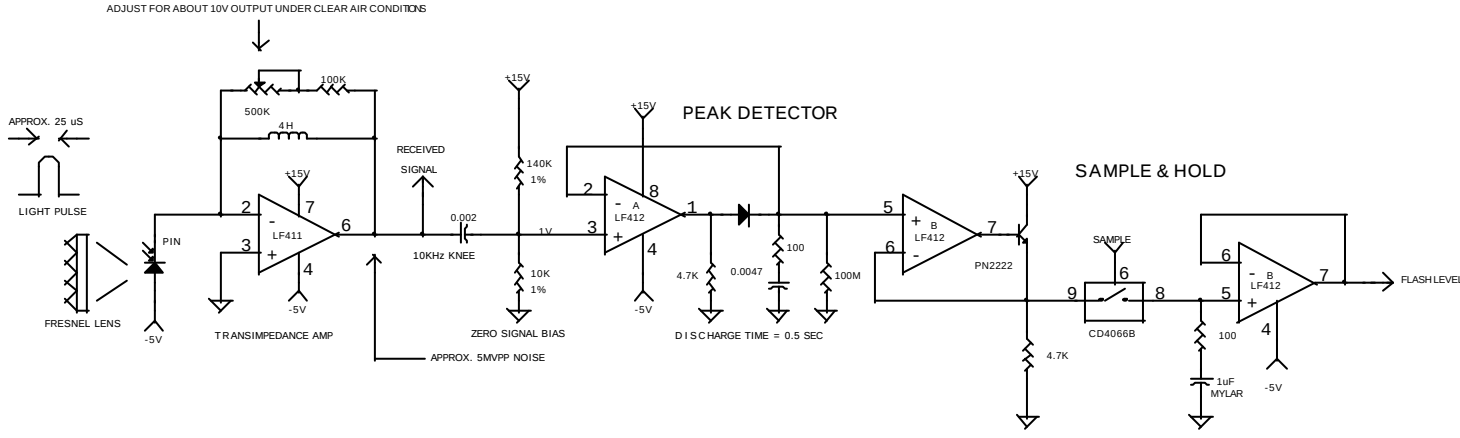
ADJUST FOR ABOUT 10V OUTPUT UNDER CLEAR AIR CONDITIONS
APPROX. 25 uS
LIGHT PULSE
FRESNEL LENS
PIN
-5V
500K
100K
4H
+15V
LF411
TRANSIMPEDANCE AMP
RECEIVED SIGNAL
10KHz KNEE
APPROX. 5MVPP NOISE
0.002
140K 1%
1V
10K 1%
ZERO SIGNAL BIAS
PEAK DETECTOR
LF412
4.7K
0.0047
100
100M
DISCHARGE TIME = 0.5 SEC
SAMPLE & HOLD
PN2222
SAMPLE
CD4066B
1uF MYLAR
FLASH LEVEL

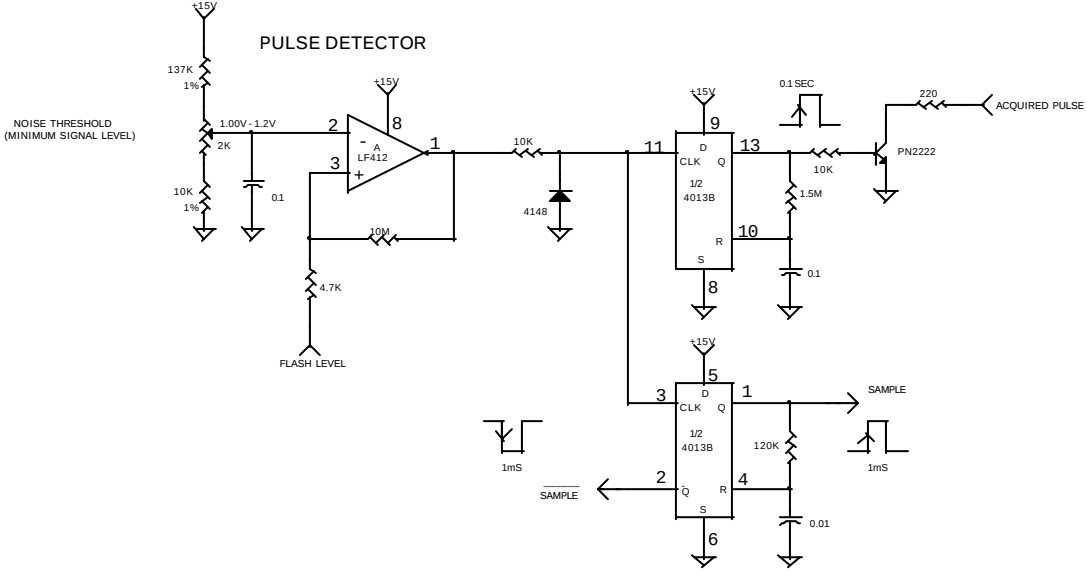
PULSE DETECTOR
+15V
137K 1%
NOISE THRESHOLD (MINIMUM SIGNAL LEVEL)
1.00V - 1.2V
2K
10K 1%
0.1
LF412
10M
4.7K
FLASH LEVEL
10K
4148
1/2 4013B
CLK
D
Q
R
S
0.1SEC
220
ACQUIRED PULSE
PN2222
1.5M
0.1
SAMPLE
1mS
120K
0.01