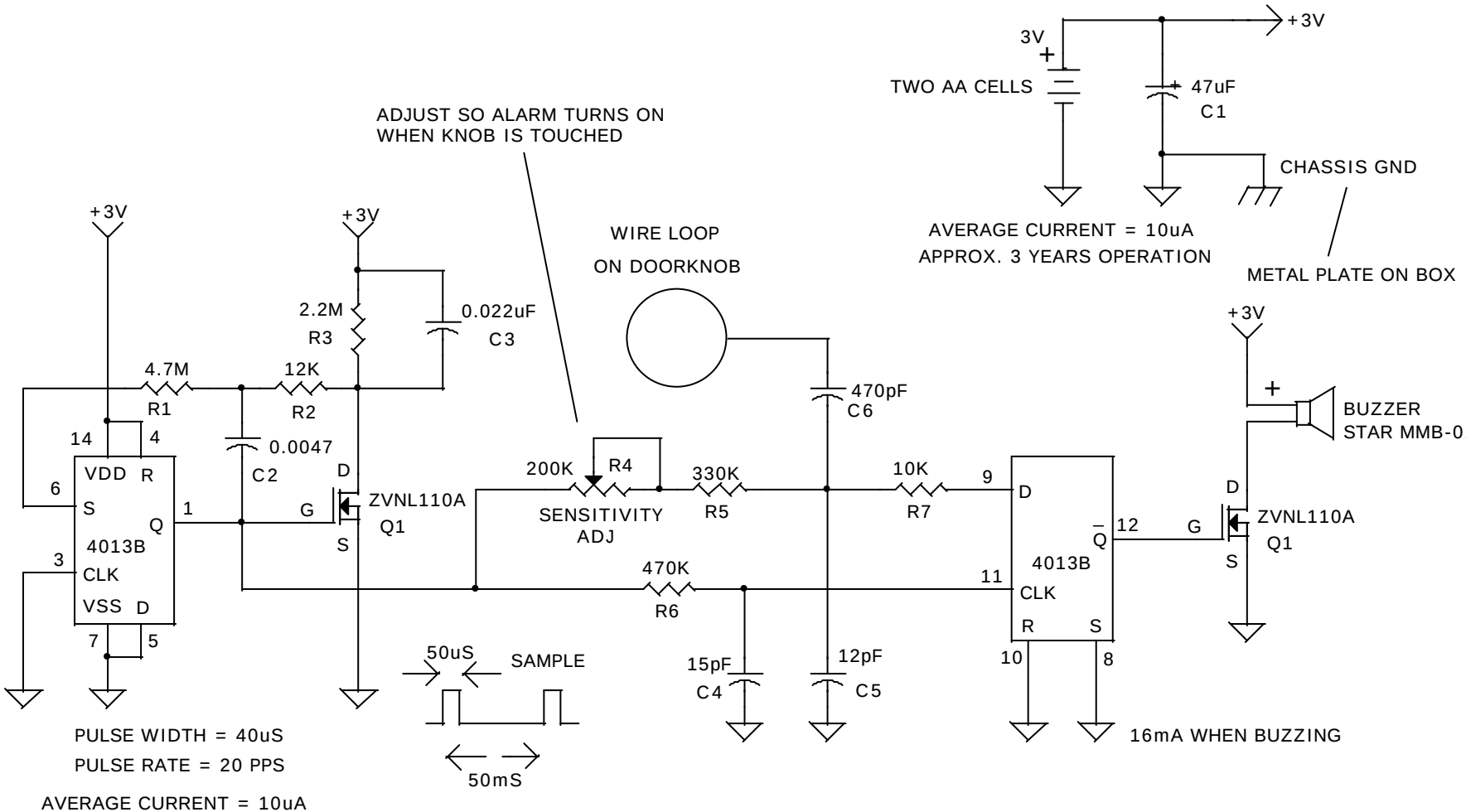
+3V
3V
TWO AA CELLS
47uF
C1
CHASSIS GND
AVERAGE CURRENT = 10uA
APPROX. 3 YEARS OPERATION
METAL PLATE ON BOX
ADJUST SO ALARM TURNS ON
WHEN KNOB IS TOUCHED
WIRE LOOP
ON DOORKNOB
2.2M
R3
0.022uF
C3
4.7M
R1
12K
R2
0.0047
C2
470pF
C6
BUZZER
STAR MMB-01
14
4
VDD
R
6
S
Q
1
4013B
3
CLK
VSS
D
7
5
D
G
ZVNL110A
Q1
S
200K
R4
SENSITIVITY
ADJ
330K
R5
10K
R7
9
D
Q̄
12
G
ZVNL110A
Q1
S
4013B
470K
R6
11
CLK
R
S
10
8
15pF
C4
12pF
C5
50uS
SAMPLE
50mS
PULSE WIDTH = 40uS
PULSE RATE = 20 PPS
AVERAGE CURRENT = 10uA
16mA WHEN BUZZING