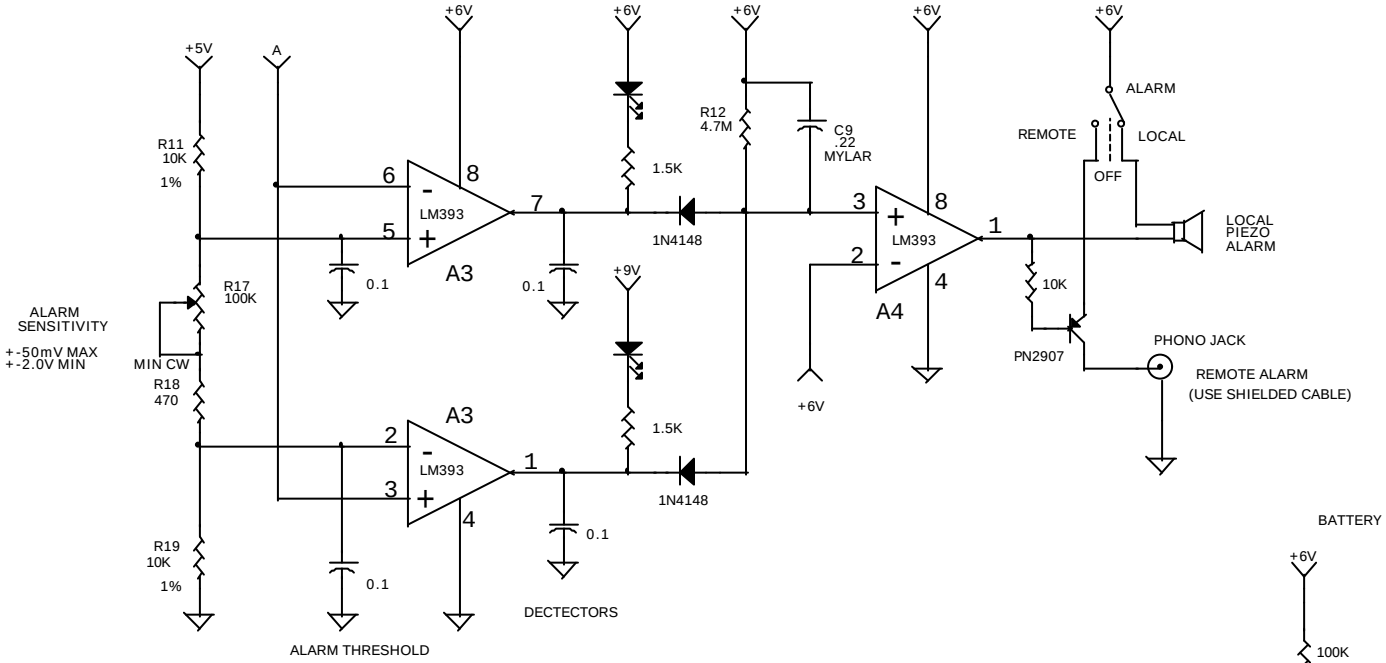
+5V
A
+6V
+6V
+6V
+6V
+6V
R11
10K
1%
6
8
LM393
7
5
A3
0.1
0.1
1.5K
1N4148
R12
4.7M
C9
.22
MYLAR
3
8
LM393
1
2
4
A4
ALARM
REMOTE
LOCAL
OFF
LOCAL
PIEZO
ALARM
10K
PN2907
PHONO JACK
REMOTE ALARM
(USE SHIELDED CABLE)
ALARM
SENSITIVITY
+-50mV MAX
+-2.0V MIN
MIN CW
R17
100K
R18
470
+9V
1.5K
1N4148
+6V
A3
2
LM393
1
3
4
0.1
R19
10K
1%
0.1
DECTECTORS
ALARM THRESHOLD

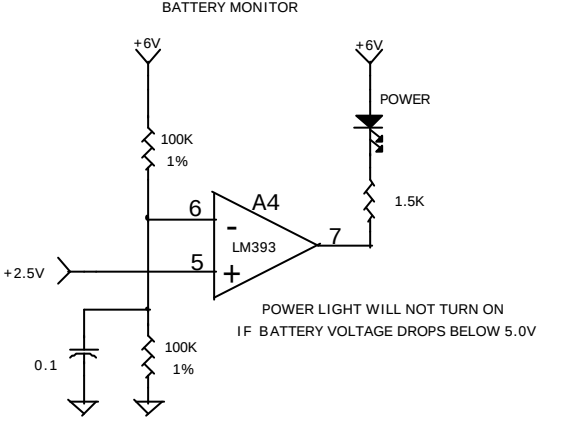
BATTERY MONITOR
+6V
+6V
POWER
100K
1%
6
A4
LM393
7
1.5K
+2.5V
5
POWER LIGHT WILL NOT TURN ON
IF BATTERY VOLTAGE DROPS BELOW 5.0V
0.1
100K
1%