2.4 GHz Bi-Directional Amplifier Using Pre-Built Modules

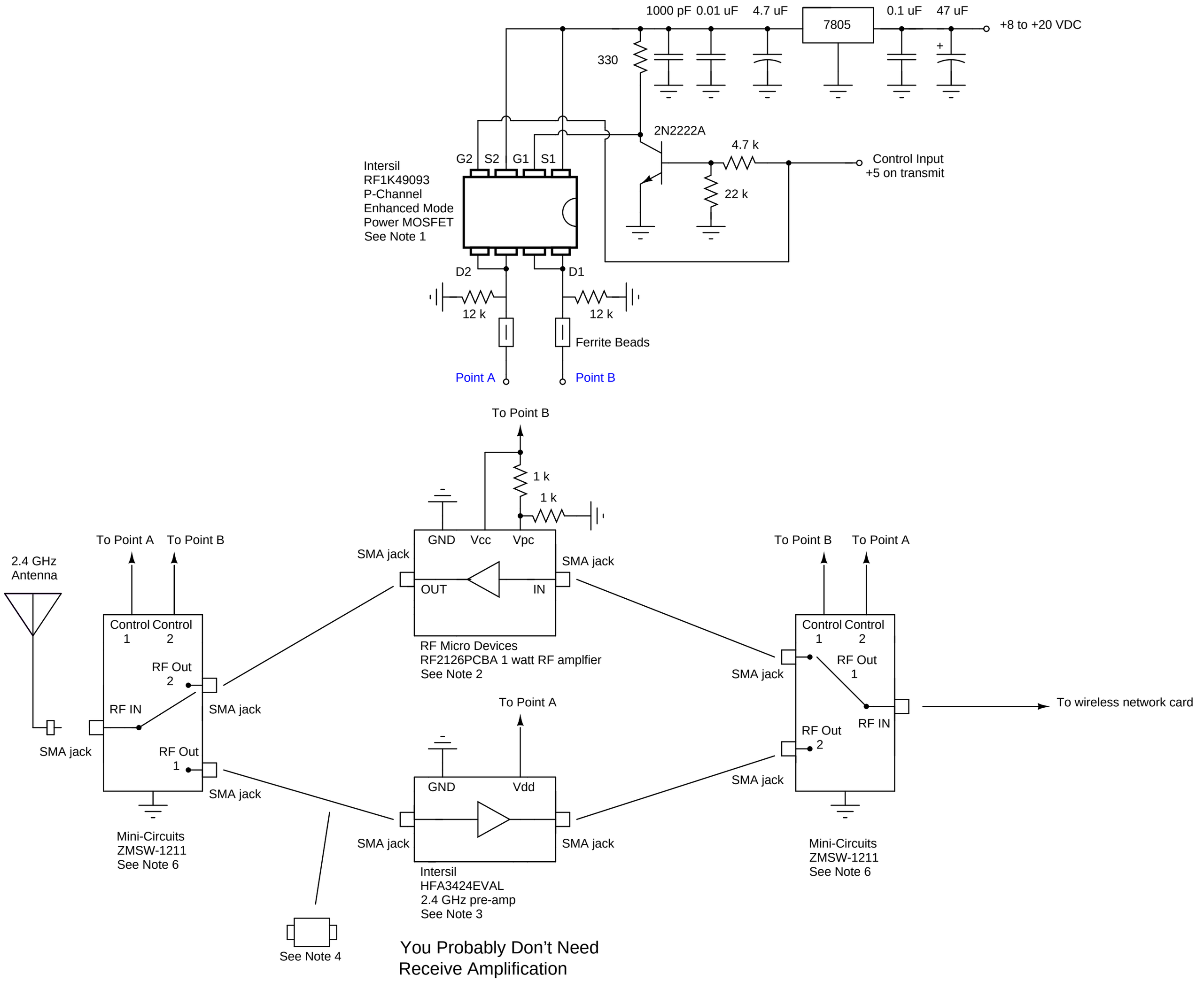

Note 1 : Available from Newark (www.newark.com), mount on a SMT carrier board from Digi-Key (www.digikey.com) #9081CA-ND
Note 2 : Available from RF Micro Devices for $150
Note 3 : Available from Allied Electronics for $150
Note 4 : 2.45 GHz bandpass filter Digi-Key #TKS2618CT-ND
Note 6 : Available from Mini-Circuits for $70 each

GBPPR 2.4 GHz di-directional amplfiier using pre-built modules		
Rev 1.0	06/05/2000	Sheet 1 of 1
Experimental Design		www.gbppr.org