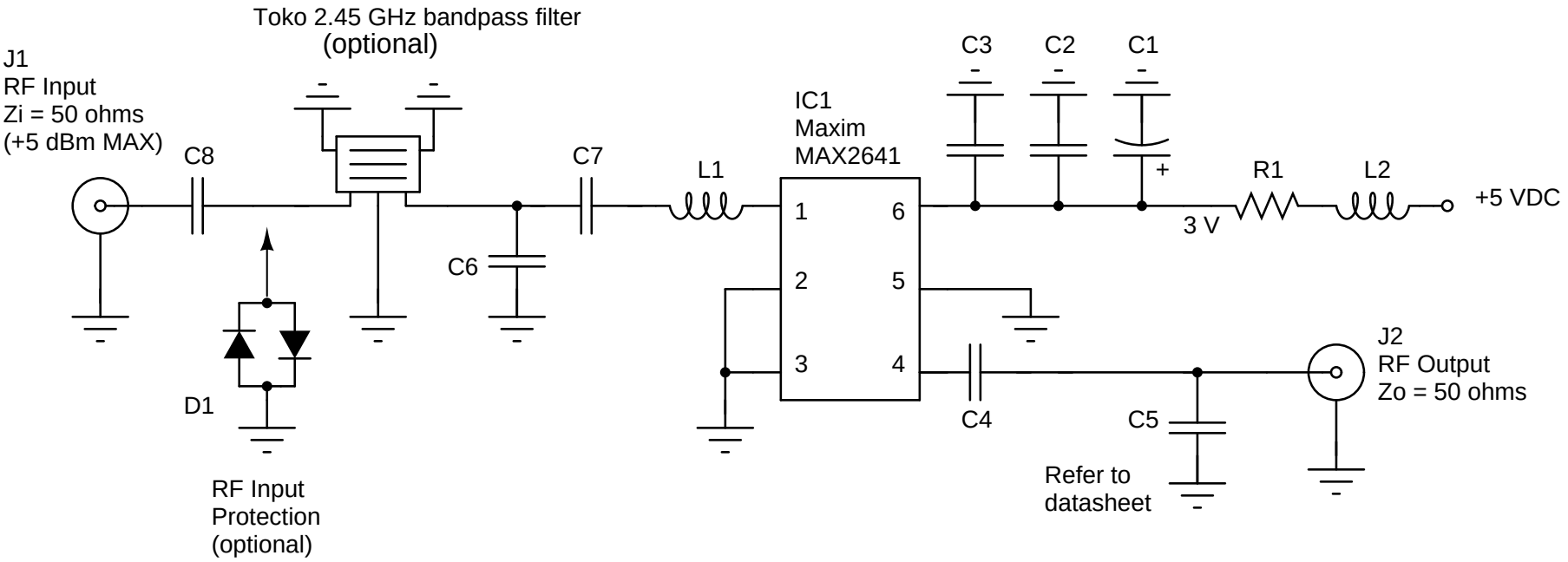

Placing the bandpass filter in the RF input will help overcome strong, local interference, but will also increase the noise figure.

Place the bandpass filter in the RF output line for the best performance in a quiet RF zone.

RF input protection diodes are needed if the amplifier will be located near a strong RF source. (or just use the bandpass filter)